Data Sheet

DXC-8R/10A/30

Multiservice Access Nodes

A compact, high-density cross-connect from n x 56/64 kbps up to STM-1

- Non-blocking digital cross-connect and traffic grooming
- E1/T1 conversion, including A-law/μ-law and signaling conversion
- STM-1, E3, T3, E1, T1, n × 56/64 kbps and ISDN services over copper, fiber, or xDSL media
- Optional common logic and power supply redundancy
- Inband, out-of-band and RADview SNMP management

The DXC family of modular multiservice access nodes provides non-blocking cross-connection of up to 960 timeslots, over up to 120 ports.

Plug-in interface modules enable n × 56/64 kbps, E1, T1, E3, T3, or STM-1 transmission over copper, fiber, IDSL, or SHDSL lines. A DIM module that provides inverse multiplexing capabilities of up to 15.7 Mbps is also available.

RAD
data communications
The Access Company

DXC-8R/10A/30

Multiservice Access Nodes

To meet the needs of different applications, the DXC family has three chassis variants:

- DXC-8R (1U-high) chassis with 4 I/O module slots
- DXC-10A (1U-high) chassis with 5 I/O module slots
- DXC-30 (3U-high) chassis with 15 I/O module slots.

All units can be mounted in 19-inch racks.

Typical applications for the DXC include:

- Local loop access with traffic grooming for redirecting voice and data to different trunks (see *Figure 1*)
- Voice and data transmission over PDH wireless devices (see *Figure 2*)
- Concentrating multiple fractional E1/T1 lines from a cellular base transceiver station (BTS) onto a full E1/T1 link to the mobile switch center (MSC) (see *Figure 3*)
- Inverse multiplexing a single higher-rate logical channel over as many as 8 E1/T1 links (see *Figure 4*).

CROSS-CONNECT

DXC-30 provides non-blocking DS0 cross-connect for up to 120 lines, DXC-10A supports up to 40 lines, and the smaller DXC-8R supports up to 32 lines. A user-programmable connection matrix routes any incoming 56/64-kbps timeslot to any outgoing 56/64-kbps timeslot. The system also enables drop-and-insert and broadcast applications.

To cross-connect n × 56 kbps or n × 64 kbps channels, the data is placed onto E1 or T1 frames using only the required number of timeslots. This provides fractional CSU/DSU functionality.

E1/T1 CONVERTER

DXC can function as a converter between 16 E1 ports and 16 T1 ports.

A-law/μ-law and signaling conversion are performed according to the E1 and T1 standards.

BASIC UNITS

The basic DXC-30 unit includes one power supply, one common logic module, and fifteen I/O slots for the plug-in interface modules. Optional redundancy for the common logic and power supply is available.

The basic DXC-10A unit includes one power supply, one common logic module, and five I/O slots for the plug-in interface modules.

The basic DXC-8R unit includes two power supplies and two common logic modules for system redundancy. The DC power supplies are hot-swappable. DXC-8R has four I/O slots for plug-in interface modules.

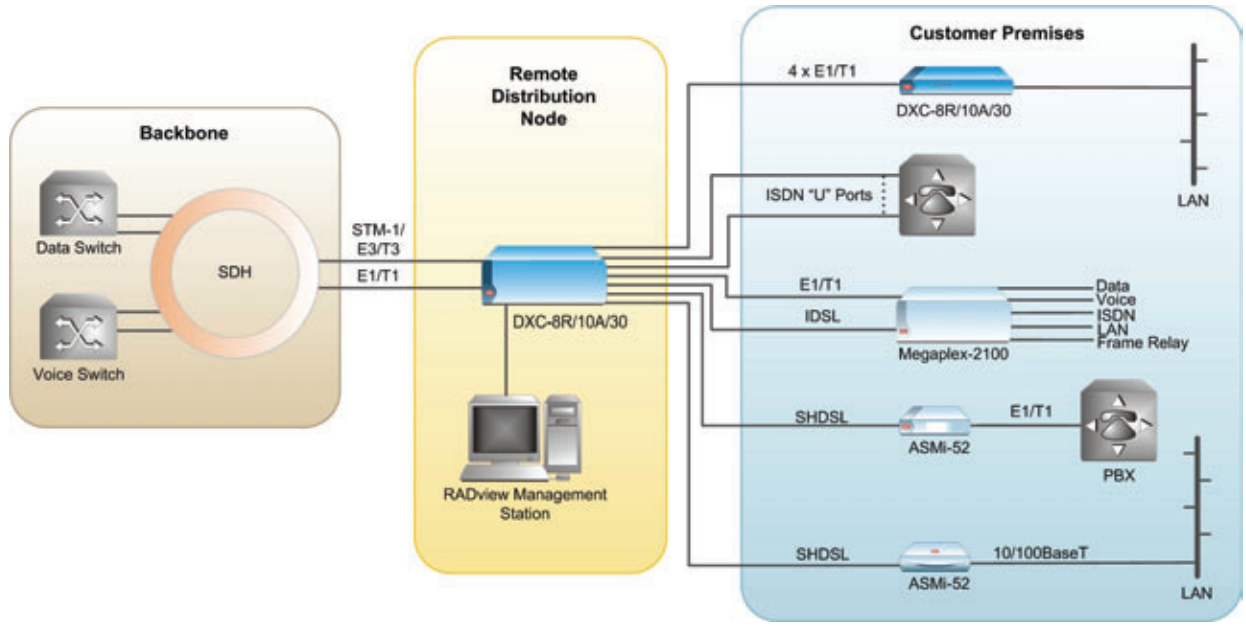

Figure 1. Multiservice Access Platform

COMMON LOGIC

The DCL.3 common logic module stores the matrix configuration and event information, as well as the configuration for alarm masking. It communicates with the management station using a SLIP/PPP/Ethernet connection (by means of an SNMP agent). DCL.3 can pass management information received from 30 different remote sites, over TS 0 or any dedicated timeslot, to the central management site. Telnet and ASCII terminal management, and Flash for software download, are also supported.

I/O MODULES

Note: *Refer to Table 1, and see separate data sheets for detailed specifications.*

DE1B is a two-port E1 module that supports both 2 and 16 frames per multiframe, TS 0 multiframe with CRC-4 and HDB3 line code, and unframed operation. For long-range applications, an LTU option is available. DE1B provides BERT, loopback per timeslot, and 1:1 redundancy. DE1B is available with either copper or fiber optic interfaces.

DT1B is a two-port T1 module that supports D4, ESF framing formats, or unframed operation. For long-range applications, a CSU option is available. DT1B provides BERT, loopback per timeslot, and 1:1 redundancy. DT1B is available with either copper or fiber optic interfaces.

D4SL and **D8SL** are four- and eight-port I/O modules that use SHDSL technology to extend the range of DXC up to 8 km (5 mi) on 24 AWG (0.5 mm) 2-wire copper cables. Combined with RAD's ASMi-52 or any standard SHDSL CPE, they extend the range of the traditional subscriber loop while saving on copper infrastructure.

D4E1 and **D8E1** are 4- and 8-port E1 modules that provide 4 or 8 E1 links over copper cables, with built-in LTU, and operate at E1 or fractional E1 rates.

D4T1 and **D8T1** are 4- and 8-port T1 modules that provide 4 or 8 T1 links over copper cables, with built-in CSU, and support T1 or fractional T1 rates.

DHS is a two-port n × 56/64 kbps data module that provides two high-speed synchronous data channels. Each channel can be ordered independently with a V.35, V.11/RS-422, V.24, or X.21 interface. Ethernet 10/100 Mbps bridge and IP router versions are also available. Synchronous channels operate at data rates of n × 56/64 kbps (where n is 1 to 24 for T1, and 1 to 31 for E1).

D8HS is an 8-port n × 56/64 kbps data module that provides eight high-speed synchronous data channels. Each data channel operates at data rates of n × 56/64 kbps (where n = 1 to 24 for T1 and 1 to 32 for E1 links).

DIM is a digital inverse multiplexer module that transmits a single higher-rate RS-530, V.35, X.21, HSSI, E1, or ETH signal over as many as 8 separate E1/T1 lines. DIM splits and transmits the individual signals through DE1B, DT1B, DE3, DT3, D4E1, D8E1, D4T1, D8T1, or DFSTM-1 modules, using different paths or facilities, to ensure transmission integrity.

DE3 is a single-port E3 interface module that multiplexes up to 16 E1 channels into an E3 frame. DE3 is available with either copper or fiber optic interfaces.

DT3 is a single-port T3 interface module that multiplexes up to 28 T1 channels into a T3 frame with either C-bit parity or M13. DT3 is available with either copper or fiber optic interfaces.

DFSTM-1 is a fractional STM-1 module that provides direct access to synchronous digital hierarchy (SDH) transmission cores, at STM-1 data rates (155.520 Mbps). An optional second interface is available for redundancy or linear ADM (daisy-chain) configurations.

D8U is an 8-port ISDN "U" interface module that provides independent ISDN "U" ports, each supporting 2B + D channels, for a total payload data rate of up to 128 kbps per port. D8U can be configured either to extend ISDN lines over non-ISDN facilities, or as a dedicated LTU (line termination unit) for RAD's ASMi-31 short-range modems.

Table 1. DXC I/O Modules

Module	Line	Number of Ports	Protocol
D4E1, D8E1	Copper	4/8	E1
D4SL, D8SL	Copper 2-wire	4/8	SHDSL
D4T1, D8T1	Copper	4/8	T1
D8HS	Copper	8	Serial
D8U	Copper	8	ISDN "U"
DE1B	Copper/Fiber optic	2	E1
DE3	Copper/Fiber optic	1/2	E3
DFSTM-1	Copper/Fiber optic	1/2	STM-1
DHS	Copper	2	Serial
DIM	Copper	1	Serial/Ethernet/E1
DT1B	Copper/Fiber optic	2	T1
DT3	Copper/Fiber optic	1	T3

MANAGEMENT

Status and diagnostic information is defined, configured, and monitored over an Ethernet management port, using an ASCII terminal with SLIP or PPP protocols. A built-in SNMP agent enables configuration and diagnostics of remote devices (up to 30 remote locations) using TS 0, a dedicated timeslot on the E1/T1 trunk, or Telnet.

A separate dial-in/dial-out port enables remote configuration (dial-in) and automatic alarm indication (dial-out). For dial-out operation, an external modem is activated to automatically dial a pre-programmed number whenever an alarm event occurs.

The network management system provides centralized control of all network nodes, including interface configuration, connection setup, and alarm management. Alarm status and system configurations are available at all times.

Multiple DXC hubs can be managed with RAD's UNIX-based SNMP management systems, RADview-EMS/TDM, RADview-PC/TDM and RADview-HPOV/TDM.

A remote DXC can be programmed and setup in two either of two ways:

- Out-of-band: via the Ethernet management port, the supervisory port of the remote unit, a modem link, or a FRAD
- Inband: via either a TS 0/F-bit or a dedicated timeslot using FR, PPP and RIP2 standard protocols.

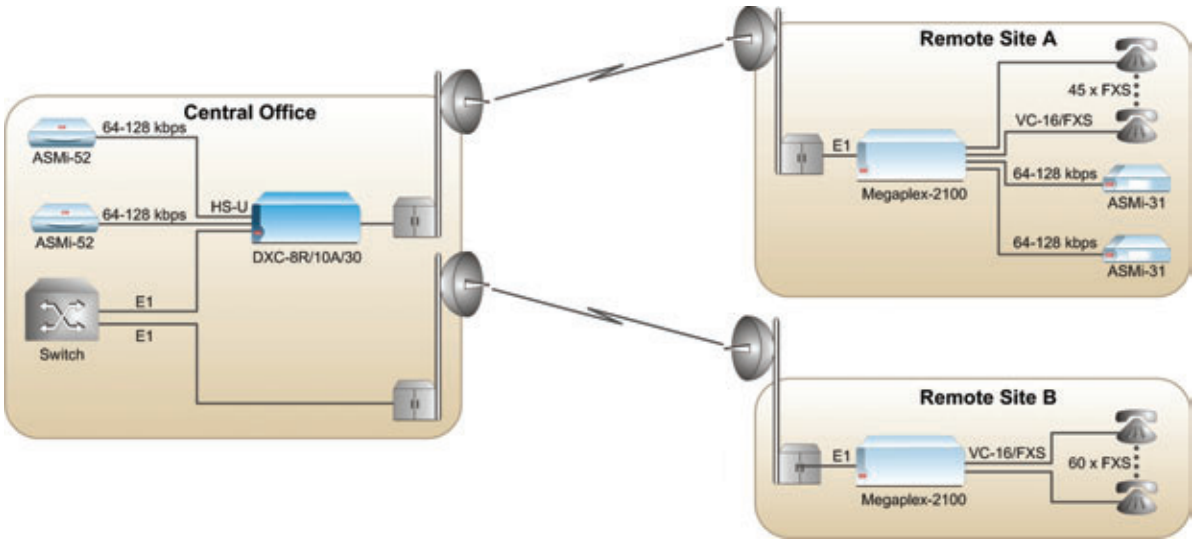

Figure 2. Voice and Data Extension

DIAGNOSTICS

DXC provides diagnostic loopbacks for each E1/T1 or n × 56/64 kbps module. E1 and T1 modules perform loopbacks per timeslot, including an internal BERT, and loopbacks toward the local or remote DTE. T1 modules also perform PLB or LLB code injection per ANSI T1.403. Any port can be configured to test and monitor data on any given port of the chassis.

Enhanced statistics capabilities include T1 ESF diagnostics according to ANSI T1.403 and RFC 3895; E1 CRC-4 diagnostics per ITU-T Rec. G.706; T3 diagnostics per RFC 3896, ANSI T1 107/107a; E3 diagnostics per RFC 3896, and STM-1 diagnostics per RFC 2258.

TIMING

System timing options include internal clock, external station (master) clock, and loopback timing from any selected external port.

REDUNDANCY

System hardware redundancy is possible by means of an optional redundant power supply and common logic (all chassis versions except DXC-10A).

DXC I/O modules have three types of redundancy:

- Line redundancy (single-slot, 1:1) ensures protective switching between ports on the same module in less than 50 msec.
- Hardware (Y-cable) redundancy between modules protects the service from hardware failure. Only copper interfaces offer this type of redundancy.
- E3/T3 line and dual-slot hardware redundancy is achieved by installing two DE3/DT3 modules in a chassis with only one module being active.

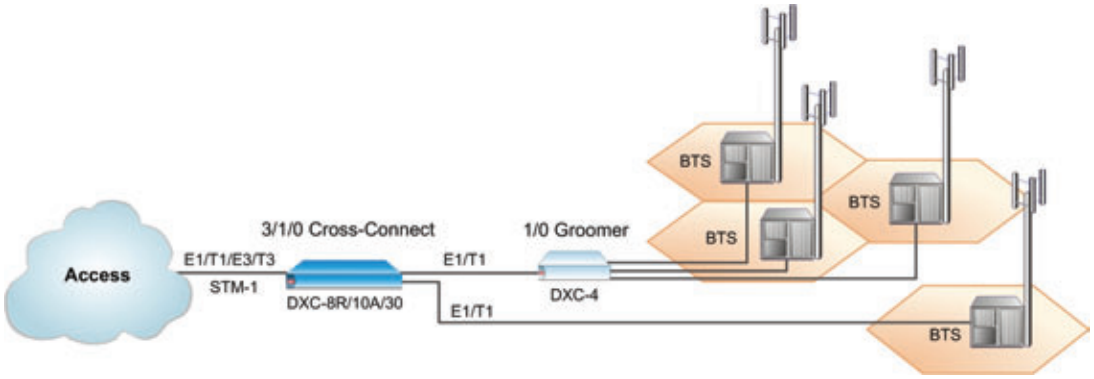

Figure 3. Bandwidth Optimization in a GSM Network Using DXC-8R/10A/30

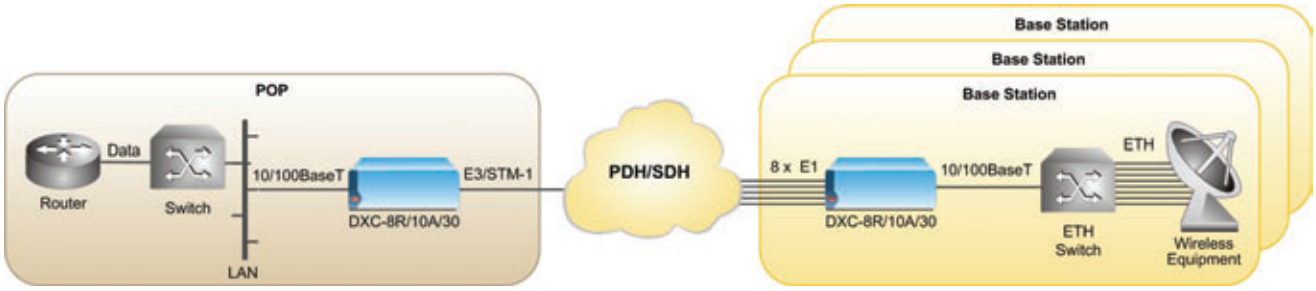

Figure 4. Inverse Multiplexing

Specifications

Timeslot Mapping
Any timeslot to any timeslot, with/without A-law/μ-law and/or signaling conversion per timeslot

Unused Timeslot Code
Any user-defined code

System Clock Source
Internal clock (±32 ppm)
External clock (G.703, RS-422)
Receive clock (from any port)

Station Clock Interface
Data rate: 1.544/2.048 Mbps (selectable)
Compliance: ITU-T Rec. G.703 or V.11/RS-422
Connectors:
RJ-45, balanced
BNC coaxial, unbalanced

Elastic Buffer
Buffer length: ±1 E1/T1 frame
Underflow: 1 frame repeated
Overflow: 1 frame skipped (no frame sync loss for buffer overflow or underflow)
Data delay: up to 375 μsec
Signaling buffer: ±1 E1/T1 multiframe

Diagnostics
Local loopbacks on all external and internal ports (except VC-4)
Remote loopbacks on all external and internal ports (except VC-4, VC-12)
Code activated network loopbacks per ANSI T1.403 on T1 interface modules
Loopback for any timeslot per ANSI 403 RDL on E1 and T1 interface modules
Built-in BERT on all external E1, T1, DHS, and DIM ports
Alarm mask (user-defined)

Statistics
E1 CRC-4:
- Per ITU-T Rec. G.706; RFC 3895, 3896
- Local support equivalent to AT&T 54016

T1, ESF:
- Full support according to ANSI T1.403
- Local support according to AT&T 54016 and RFC 3895
- Transparent FDL between ports

E3: RFC 3896

T3: RFC 3896, ANSI T1 107, ANSI T1 107a

STM-1: RFC 2258

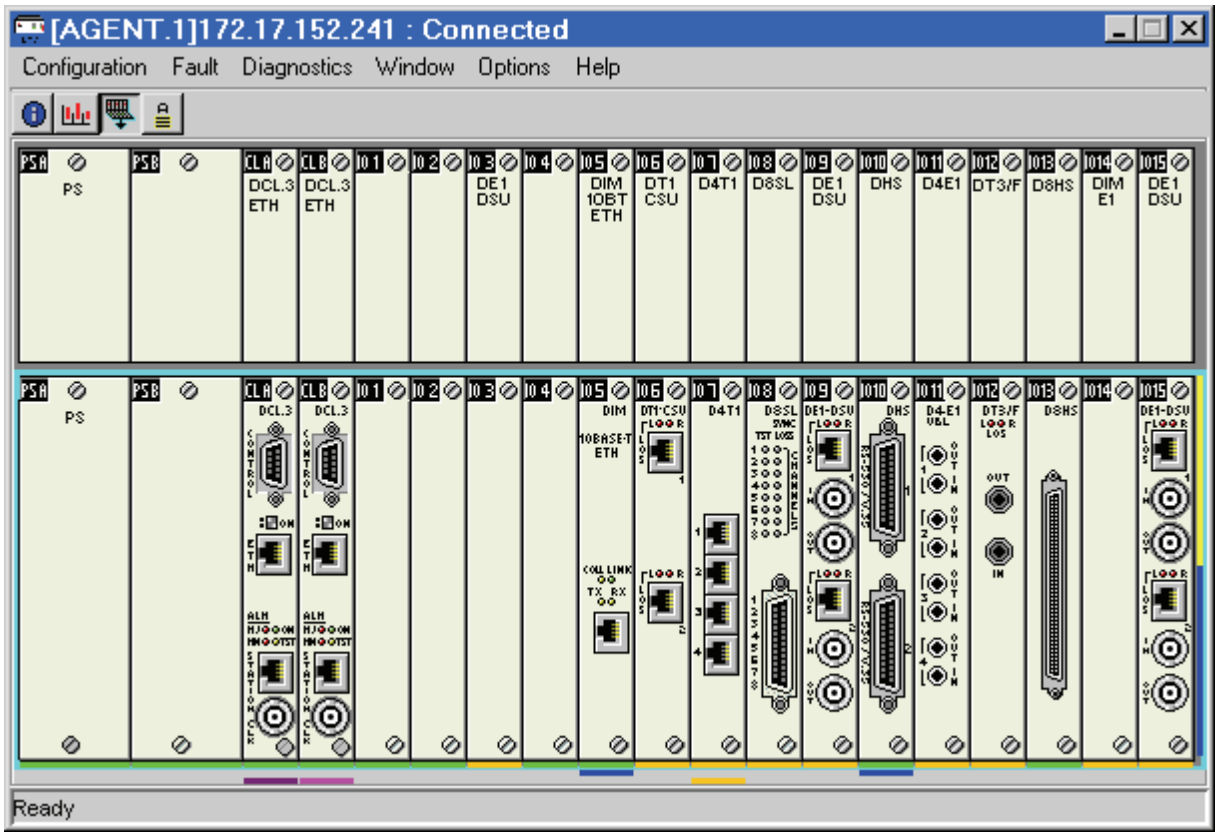

Figure 5. Example of Rear Panel in RADview-EMS

Management Port
Ethernet: 10/100BaseT

Indicators
Front panel: Major alarm, minor alarm, test, on-line (per power supply), on-line (per common logic)
Rear panel: module indicators (see separate data sheets)

Power Supply
100–240 VAC, 47 to 63 Hz
–48 VDC nominal

Power Consumption (max)
DXC-8R: 72W (DC), 60W (AC)
DXC-10A: 75W (DC), 60W (AC)
DXC-30: 120W (DC), 250W (DC), 120W (AC)

Physical
DXC-30:
Height: 13.2 cm (5.25 in (3U))
Width: 43.8 cm (17 in)
Depth: 25.4 cm (10 in)
Weight: Less than 8 kg (17 lb)

DXC-10A and DXC-8R:
Height: 4.4 cm (1.75 in (1U))
Width: 44.0 cm (17.3 in)
Depth: 25.4 cm (10 in)
Weight: Less than 2.5 kg (5.5 lb)

***Note**: All weights are given for fully equipped chassis.*

Temperature
DXC-8R, 10A: 0° to 50°C (32° to 122°F)
DXC-30: 0° to 45°C (32° to 113°F)

***Note**: For extended temperature ranges, contact your local RAD partner.*

Humidity
Up to 90%, non-condensing

Table 2. DXC Family Comparison

Feature	DXC-8R	DXC-10A	DXC-30 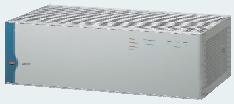	DXC-100
Height	1U	1U	3U	6U per nest
Maximum number of ports	32	40	120/*	688 (8 nests)
Number of I/O slots	4	5	15	86 (8 nests)
System redundancy	Built-in	None	Optional	Optional
E1, T1, E3, T3, STM-1 modules	✓	✓	✓	✓
XDSL, inverse multiplexing modules	✓	✓	✓	–
n x 56/64 kbps modules	✓	✓	✓	✓
Router, OC-3 modules	–	–	–	✓
ASCII, SNMP, RADview management	✓	✓	✓	✓

* Maximum of 240 ports with the ISDN option only.

DXC-8R/10A/30

Multiservice Access Nodes

Ordering

Basic units, additional system modules, and I/O modules are ordered separately. When ordering I/O modules, refer to the module data sheets.

BASIC UNITS

DXC-30-3/UTP/*/~
3U-high chassis with 15 I/O slots, one power supply, and one common logic module. Management via Ethernet 10/100BaseT port.

DXC-10A-3/UTP/~
1U-high chassis with 5 I/O slots, one power supply, and common logic module. Management via Ethernet 10/100BaseT port.

DXC-8R-3/UTP/~
1U-high chassis with 4 I/O slots, two power supplies, and two common logic modules. Management via Ethernet 10/100BaseT port.

SYSTEM MODULES

DXC-30M-CL.3/UTP
Common logic modules for DXC-8R, DXC-10A, or DXC-30. Management via Ethernet 10/100BaseT port.

DXC-30M-PS/~
Power supply module for DXC-30

DXC-8RM-PS/48
DC power supply module for DXC-8R

Legend

- ***** Redundancy:
  - **R** Power supply and common logic redundancy
- **~** Power supply:
  - **AC** 100 to 240 VAC
  - **48** 48 VDC
  - **48HP** DXC-30 high-power chassis only (this unit requires a fan tray)

SUPPLIED ACCESSORIES

Mounting kits are supplied according to the device ordered.

RM-DXC8R
19-inch rack mount kit for DXC-8R

RM-DXC10A
19-inch rack mount kit for DXC-10A

RM-DXC30
19-inch rack mount kit for DXC-30

AC power cord (supplied when AC power supply is ordered)

DC adapter plug (supplied when DC power supply is ordered)

OPTIONAL ACCESSORIES

CBL-DB9F-DB9M-STR
Control cable

DXC-30M-FT/#
Fan tray for DXC-30

Legend

- **#** Power supply for fan tray:
  - **AC** 100 to 240 VAC
  - **48** 48 VDC

772-100-09/10 Specifications are subject to change without prior notice. © 1993–2010 RAD Data Communications Ltd. The RAD name, logo, logotype, and the terms EtherAccess, TDMoIP and TDMoIP Driven, and the product names Optimux and IPmux, are registered trademarks of RAD Data Communications Ltd. All other trademarks are the property of their respective holders.

International Headquarters
24 Raoul Wallenberg Street
Tel Aviv 69719, Israel
Tel. 972-3-6458181
Fax 972-3-6498250, 6474436
E-mail market@rad.com

North America Headquarters
900 Corporate Drive
Mahwah, NJ 07430, USA
Tel. 201-5291100
Toll free 1-800-4447234
Fax 201-5295777
E-mail market@radusa.com

www.rad.com

Order this publication by Catalog No. 803218

RAD data communications
The Access Company